HUB-IO100

Technical data sheet

Document version 1.1 | Publication date:
25. April 2025

Views of the HUB-IO100

Device views

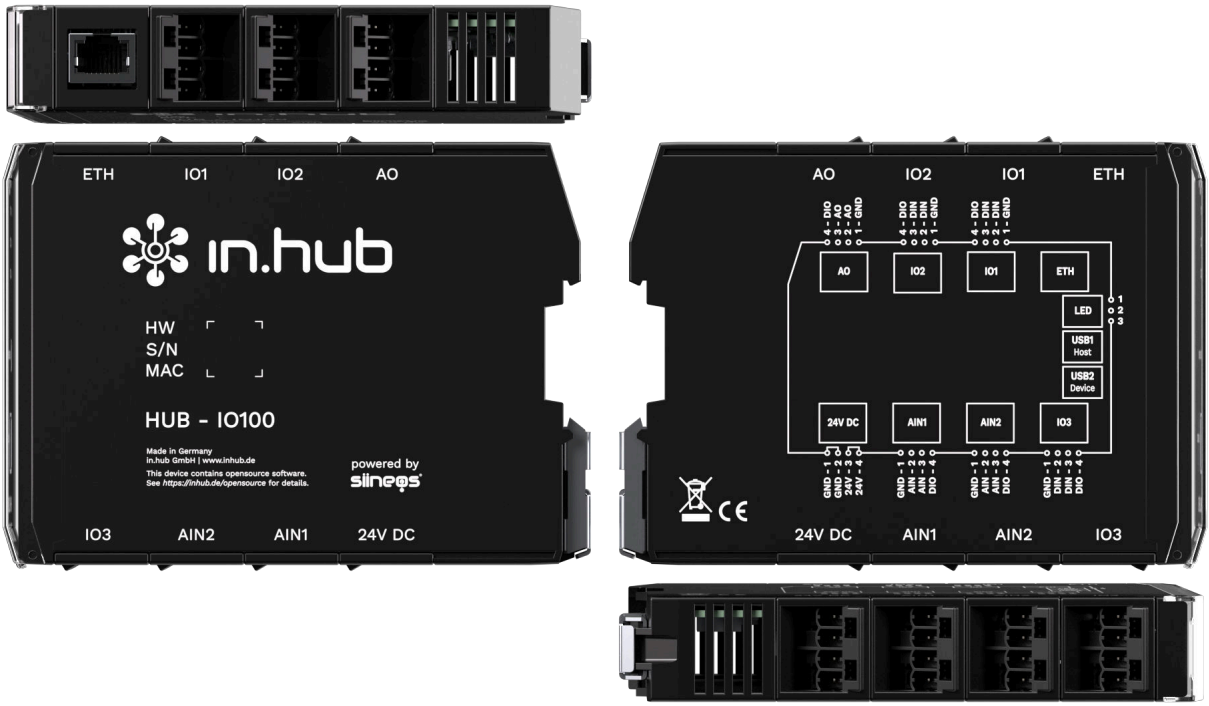

Schematic diagram

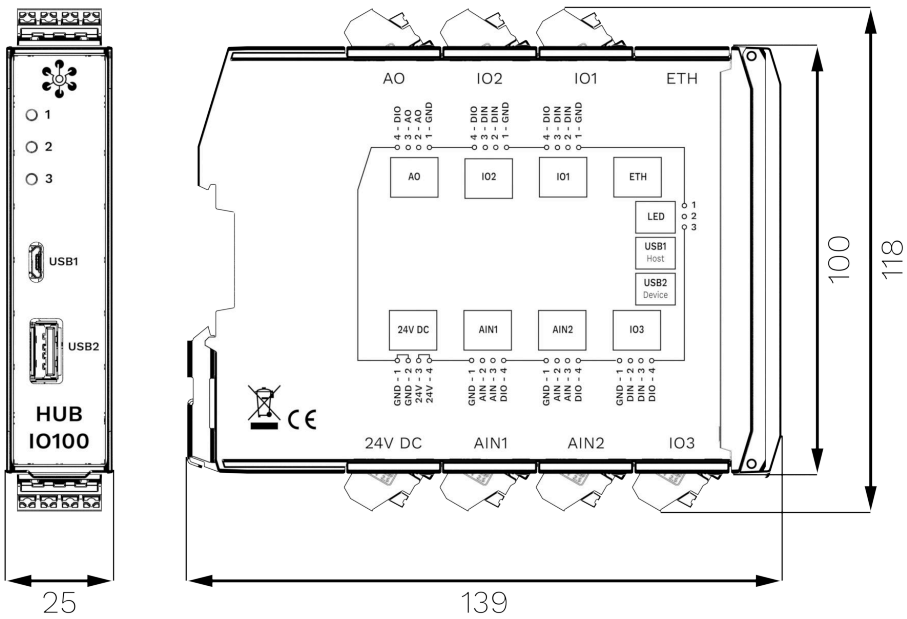

Dimensions of the HUB-IO100 in mm

Technical data

Data	
Power supply	24 V DC, max. 1 A
Typical power consumption	5 W
Max. power consumption	24 W
Processor	NXP® i.MX 6ULL
Memory	RAM: 256 MB DDR3L, Flash: 512 MB SLC NAND
Data interfaces	USB1: Host (Micro-USB) USB2: Device (USB-A) Ethernet: 100 Mbit/s 3× status LEDs Backplane bus
Connections for peripheral devices	6× digital input/output 6× digital input 4× analogue input 2× analogue output
Protocols	OPC UA server + client MQTT broker server + client Modbus TCP/IP broker client + server
Operating system	SIINEOS IIoT operating system for configuration and data visualization
Housing	Plastic (polyamide), black, flammability class UL 94 V0
Protection class	IP20
Dimensions	139 mm × 100 mm × 25 mm
Weight	150 g

Ambient conditions	
Temperature range	Storage: –40°C to 85°C Operation: 0°C to 50°C
Humidity	Storage: 10% to 95% RH, non-condensing Operation: 20% to 90% RH, non-condensing
Operating altitude	Max. 2,000 m above sea level

Storage	
Recording interval	Minimum 1 second
Storage	100 MB
Data export	VictoriaMetrics

SIINEOS	
Pre-installed software	**FlexPlorer**: Live data visualization **Azure IoT Hub Connector**: Connector to the Microsoft® IoT platform **Cloud of Things Connector**: Connector to the Telekom® IoT platform **NumCorder**: Recording of scanned or entered barcodes / serial numbers **OPC UA server**: Counterpart to the OPC UA client, setting up of a server–client structure with one device **PromEx**: Database configuration of VictoriaMetrics and Prometheus
I/O interfaces to third-party systems/devices	**S7 PLC client**: Connector for the Siemens® S7 controller **Sensirion SPS30**: Temperature and humidity sensor **TBEN-S1-8DIP**: TBEN module from TURCK® **TBEN-S2-4AI**: TBEN module from TURCK®

Specification of inputs and outputs

Digital input DIN	
Conformity	EN61131-2 Type 1
Switching threshold	Between 5 V and 15 V
Input resistance	Typ. 7 kΩ, max. 200 mW
Bandwidth	From 6 Hz (with 12 channels, 2 edges) to 150 Hz (with 1 channel, 1 edge)*
Permissible input voltage range	–3 to 30 V
Circuit diagram	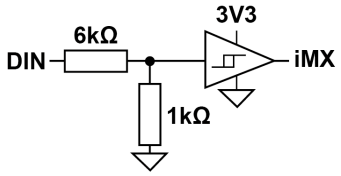

Configuration of DIO as a digital input	
Conformity	EN61131-2 Type 1/3
Switching threshold	Between 5 V and 11 V
Pull-down current	Typ. 2 mA
Bandwidth	From 6 Hz (with 12 channels, 2 edges) to 150 Hz (with 1 channel, 1 edge)*
Permissible input voltage range	–3 to 30 V
Circuit diagram	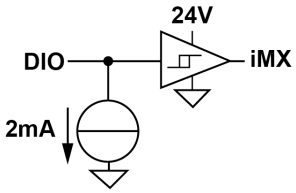

Configuration of DIO as a digital output	
Power supply	From 24 V Protective functions: Overload protection, reverse-current protection
Conformity	EN61131-2 nominal current 0.1 A
Max. output current	Typ. 120 mA
Switching interval	≥50 ms*
Voltage drop to 24 V	Max. 1 V

Configuration of DIO as a digital output	
Circuit diagram**	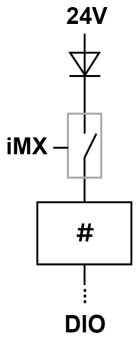

Analogue input AIN	
Operating modes	Current, voltage Protective functions: Overload protection In 20 mA mode, the current is limited to 22–30 mA
Measuring range	0–11 V / 0–24 mA
Resolution	12 bit
Input resistance	101 kΩ
Sampling interval	≥50 ms*
Permissible input voltage range	–3 to 30 V
Circuit diagram**	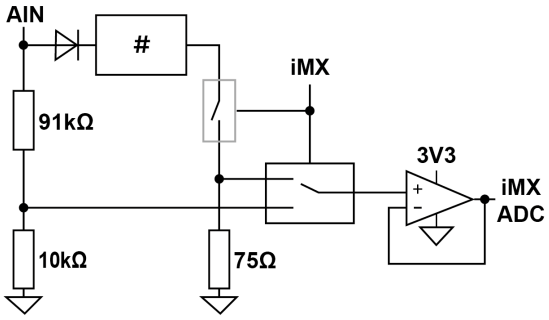

Analogue output AO	
Power supply	From 24 V Protective functions: Overload protection, reverse-current protection
Max. output current	25 mA
Voltage drop to 24 V	Max. 2 V
Resolution	12 bit
Sampling interval	≥50 ms*
Permissible input voltage range	–3 to 30 V

Analogue output AO	
Circuit diagram	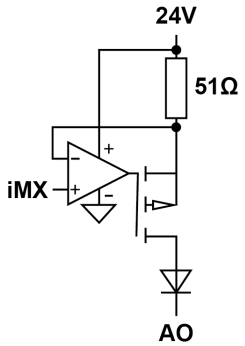

*Only if processor is not busy

**The hash (#) in the circuit diagram indicates the overload protection.

USB interface specifications

USB connections	
Max. power consumption for **USB1** (Micro-USB on the front of the device)	5 W (1 A) May vary depending on the device connected: • On a 24 V power supply, the power consumption is 0. • The following interfaces cannot be used on a 5 V power supply: DIO as a digital output, DIO as a digital input, analogue output AO
Max. power output **USB2**	2.5 W (500 mA) with 24 V supply
Support for	Full, high and low speed (480, 12 and 1.5 Mbit/s)
Circuit diagram*	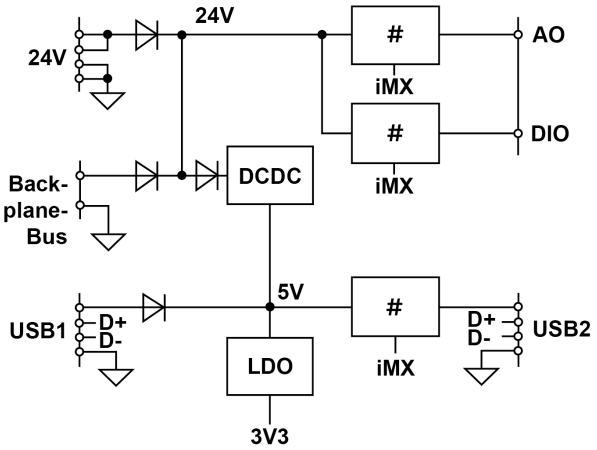

*The hash (#) in the circuit diagram indicates the overload protection.

Backplane bus specification

Backplane bus	
Voltage on the backplane bus	Voltage of the power supply unit minus 0.5 V Switchable in the signals of the master gateway
Communication	Modbus RTU
Max. number of additional modules on one master gateway	3

Measurements and associated Modbus registers

Measurements	Modbus register: Raw value [unit]	Modbus register: Processed value [unit]
Modbus input register		
AIN1 AIN1 socket – pin 2	1 (UINT16) [µA/mV]	110+111 (FLOAT) [mA/V]
AIN2 AIN1 socket – pin 3	2 (UINT16) [µA/mV]	120+121 (FLOAT) [mA/V]
AIN3 AIN2 socket – pin 2	3 (UINT16) [µA/mV]	130+131 (FLOAT) [mA/V]
AIN4 AIN2 socket – pin 3	4 (UINT16) [µA/mV]	140+141 (FLOAT) [mA/V]
Modbus holding register		
AOUT1 AO socket – pin 2	1 (UINT16) [µA]	210+211 (FLOAT) [mA]
AOUT2 AO socket – pin 3	2 (UINT16) [µA]	220+221 (FLOAT) [mA]
Modbus disk input register		
DIN1 IO1 socket – pin 2	1 (UINT16)	310+311 (FLOAT)
DIN2 IO1 socket – pin 3	2 (UINT16)	320+321 (FLOAT)
DIN3 IO2 socket – pin 2	3 (UINT16)	330+331 (FLOAT)
DIN4 IO2 socket – pin 3	4 (UINT16)	340+341 (FLOAT)
DIN5 IO3 socket – pin 2	5 (UINT16)	350+351 (FLOAT)
DIN6 IO3 socket – pin 3	6 (UINT16)	360+361 (FLOAT)
Modbus coil register		
DIO1 IO1 socket – pin 4	1 (UINT16)	410+411 (FLOAT)
DIO2 IO2 socket – pin 4	2 (UINT16)	420+421 (FLOAT)
DIO3 AO socket – pin 4	3 (UINT16)	430+431 (FLOAT)
DIO4 IO3 socket – pin 4	4 (UINT16)	440+441 (FLOAT)
DIO5	5 (UINT16)	450+451 (FLOAT)

Measurements	Modbus register: Raw value [unit]	Modbus register: Processed value [unit]
AIN2 socket – pin 4		
DIO6 AIN1 socket – pin 4	6 (UINT16)	460+461 (FLOAT)

This document is available in electronic form in the download portal of in.hub. Printed versions or copies not explicitly provided by in.hub are deemed uncontrolled.

The original language of this document is German.

Made in Germany.

Service & Support: service@inhub.de | https://community.inhub.de/

in.hub Download portal: https://download.inhub.de/

in.hub GmbH
Technologie-Campus 1
DE-09126 Chemnitz

+49 371 335 655 00
info@inhub.de